RLH Industries, Inc.
Fiber Optic Link

The leader in rugged, fiber optic technology

USER GUIDE

www.fiberopticlink.com

UG-M065 2023-08-07

Slimline Nano Fiber Patch Panel

Ultra Small Foot Print Wall or DIN Mount Fiber Patch Panel

The Slimline Nano Fiber Patch Panel is designed to provide an ultra small foot print for fiber optic patching and splicing applications where a wall or DIN rail mounting is desired.

The patch panel holds one fiber adapter plate which is available with ST, SC, FC, LC, MTRJ, UPC, and APC style adapters. The adapter plate may be ordered separately or preinstalled, and a fiber pigtail can be ordered bundled with the patch panel through our configurator.

The sturdy steel enclosure is powder coated light grey and features a hinged door secured with convenient flip down plunger latches. The door offers easy and full access to the inside compartment making the installation and cable routing less challenging.

Each patch panel includes an adhesive splice holder, fiber splice protection sleeves, distribution chart, cable mounting tie-downs, and adhesive Velcro® hook and straps for securing fiber cable. Self-sealing, removable 1” grommets on the top and bottom of the enclosure allow a safe entrance and exit for the fiber cable.

The patch panel can be wall mounted with the include hardware or DIN rail mounted when ordered with a DIN clip. The heavy duty DIN clip allows for quick and secure mounting in a variety of applications where DIN rail is present.

DIN Mount

Wall Mount

Key Features

- Optional heavy duty DIN-Rail clip for DIN Mounting Applications
- Supports ST, SC, FC, LC, MTRJ, UPC, APC style adapters
- Steel enclosure, powder coated light grey
- Holds 1 adapter plate
- Hinged door with plunger latches
- Wall mounting hardware included
- Splice holder and fiber splice protection sleeves included
- Self-sealing removable grommets on the top and bottom
- Adhesive Velcro hook and straps for easy and flexible fiber management included

Dimensions & Components

The dimensional diagram below calls out important features of the Wall Mount Patch Panel.

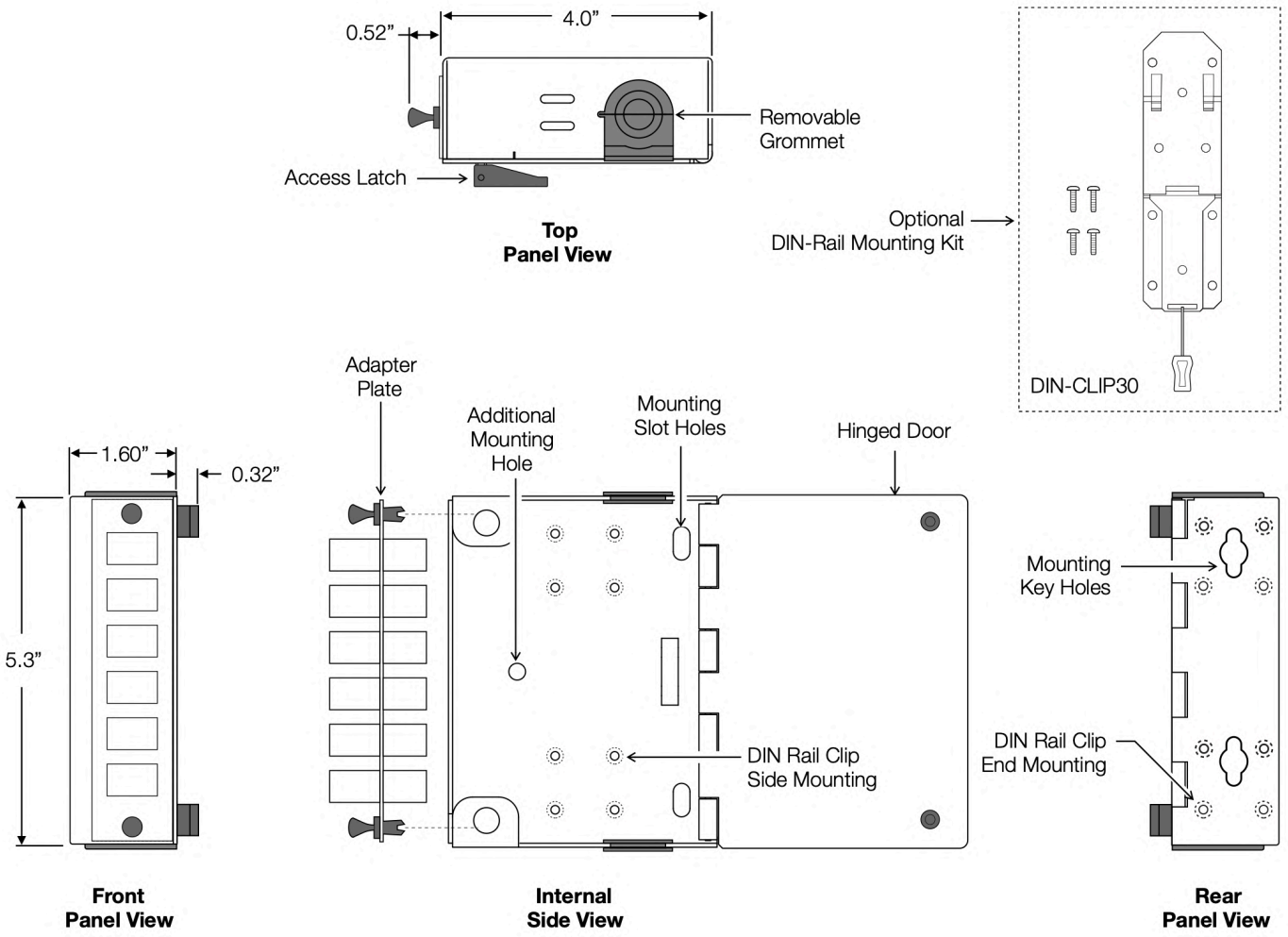

Installation

Choose a suitable location, with room for the door to open fully for easy access to the interior. Pre-position the patch panel to plan out cable routings and check for any potential problems with the location. The patch panel may be mounted in any orientation making it a flexible solution in the field.

Installation (cont'd)

Wall Mounting

Once the position is determined, mark out the mounting points and use the included 3/4" screws to mount the patch panel. For all other mounting applications, use appropriate mounting hardware as required.

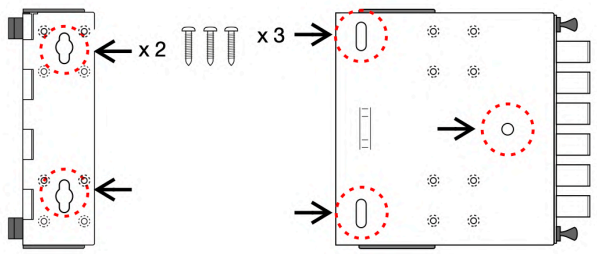

Wall Mounting Hole Locations

Installation Examples

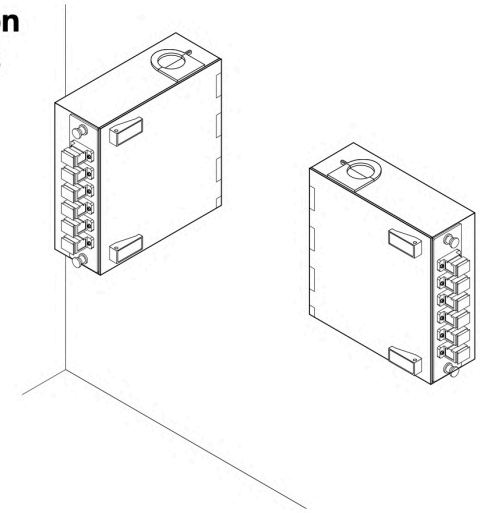

DIN Rail Mounting

The patch panel may be configured for DIN rail mounting facing right or left, using a rear or side DIN rail installation. Attach the DIN Clip using the screws provided onto the lower set of holes for your desired orientation. This will center the patch panel when mounted on the DIN rail.

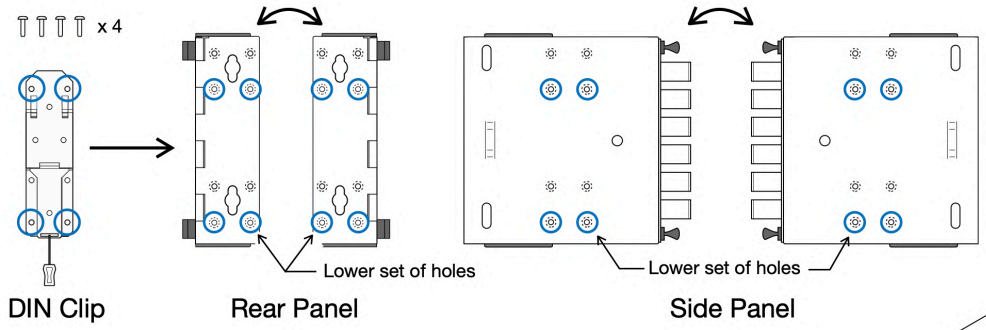

DIN Clip Mounting Hole Locations

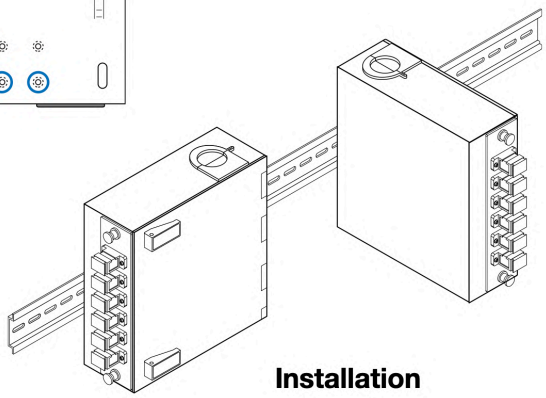

Installation Examples

Ordering Information

Use the following part number when ordering the patch panel without fiber adapter plates or pigtails.

Description	Mounting	Capacity	Dimensions	Part Number
Nano Slimline Fiber Patch Panel	Wall	1 Adapter Plate	4.0” (W) x 1.6” (D) x 5.3” (H)	PWSN-A-1
Nano Slimline Fiber Patch Panel	DIN Rail	1 Adapter Plate	4.0” (W) x 1.6” (D) x 5.3” (H)	PWSN-A-1-D

- Fiber adapter plates and/or pigtails can be ordered separately; plates can be preinstalled, while pigtails will be bundled

Description	Part Number
DIN Rail Mounting Kit	DIN-CLIP30

Ordering with Fiber Adapter Plate, Pigtail, and DIN Clip

Use the ordering code below to order the patch panel with any combination of a preinstalled adapter plate, bundled fiber pigtail, and preinstalled DIN clip. Refer to the Fiber Adapter Plate Chart and the Fiber Pigtail Chart on the following pages.

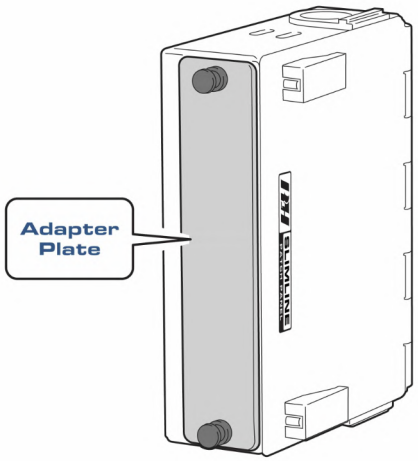

Example #1:	**PWSN - A - 66 - 65 -1**	
	Adapter Plate (66):	AP-LC3-LDMX-G
	Fiber Pigtail (65):	RLH-06MXLC-03M
	Din Clip (Blank):	None
Example #2:	**PWSN - A - 08 - 00 - 1 -D**	
	Adapter Plate (08):	AP-ST12-LSMM-G
	Fiber Pigtail (00):	None
	Din Clip (-D):	DIN-CLIP30

PWSN - A - [XX] - [XX] - 1 [-X]

Fiber Adapter Plate
Use the code from the Adapter Plate Chart* to populate with an adapter plate

Fiber Pigtail
Use the code from the Fiber Pigtail Chart* to have a pigtail bundled together with the patch panel

DIN Clip
Add “-D” to include preinstalled DIN Clip

*Please refer to the **Fiber Adapter Plate Chart** and the **Fiber Pigtail Chart** on the following pages.

Ordering Information (cont'd)

Adapter Plate Chart

Use the Adapter Code to specify the desired plate style to be preinstalled.

Adapter Plate Style						Supported Fiber Types	Grey Plate Part Number	Adapter Code
Adapter	Mode	Type	Fibers	Positions	Color			
Blank	**–**	–	–	–	–	–	**AP-BLANK-G**	**00**
ST	**SM**	Simplex	6	6	Yellow Caps	OS1/OS2	**AP-ST6-LSSM-G**	**01**
			12	12	Yellow Caps	OS1/OS2	**AP-ST12-LSSM-G**	**03**
	MM	Simplex	6	6	Black Caps	OM1~OM4	**AP-ST6-LSMM-G**	**06**
			12	12	Black Caps	OM1~OM4	**AP-ST12-LSMM-G**	**08**
FC	**SM**	Simplex	6	6	Yellow Caps	OS1/OS2	**AP-FC6-LSSM-G**	**20**
	MM	Simplex	6	6	Black Caps	OM1/OM2	**AP-FC6-LSMM-G**	**23**
FC/APC	**SM**	Simplex	6	6	Green Caps	OS1/OS2	**AP-FA6-LSSM-G**	**26**
SC	**SM**	Simplex	6	6	■ blue	OS1/OS2	**AP-SC6-LSSM-G**	**30**
		Duplex	12	6	■ blue	OS1/OS2	**AP-SC6-LDSM-G**	**32**
	MM	Simplex	6	6	■ beige	OM1/OM2	**AP-SC6-LSMM-G**	**33**
		Duplex	12	6	■ beige	OM1/OM2	**AP-SC6-LDMM-G**	**35**
SC/APC	**SM**	Simplex	6	6	■ green	OS1/OS2	**AP-SA6-LSSM-G**	**36**
		Duplex	12	6	■ green	OS1/OS2	**AP-SA6-LDSM-G**	**38**
SC 10G	**MM**	Simplex	6	6	■ aqua	OM3/OM4	**AP-SC6-LSMX-G**	**39**
		Duplex	12	12	■ aqua	OM3/OM4	**AP-SC6-LDMX-G**	**41**
LC	**SM**	Duplex	6	3	■ blue	OS1/OS2	**AP-LC3-LDSM-G**	**51**
			12	6	■ blue	OS1/OS2	**AP-LC6-LDSM-G**	**52**
		Quad	24	6	■ blue	OS1/OS2	**AP-LC6-LQSM-G**	**54**
	MM	Duplex	6	3	■ beige	OM1/OM2	**AP-LC3-LDMM-G**	**56**
			12	6	■ beige	OM1/OM2	**AP-LC6-LDMM-G**	**57**
		Quad	24	6	■ beige	OM1/OM2	**AP-LC6-LQMM-G**	**59**
LC/APC	**SM**	Duplex	6	3	■ green	OS1/OS2	**AP-LA3-LDSM-G**	**61**
			12	6	■ green	OS1/OS2	**AP-LA6-LDSM-G**	**62**
		Quad	24	6	■ green	OS1/OS2	**AP-LA6-LQSM-G**	**64**
LC 10 GIG	**MM**	Duplex	6	3	■ aqua	OM3/OM4	**AP-LC3-LDMX-G**	**66**
			12	6	■ aqua	OM3/OM4	**AP-LC6-LDMX-G**	**67**
		Quad	24	6	■ aqua	OM3/OM4	**AP-LC6-LQMX-G**	**69**
CAT6 RJ-45	**–**	Coupler	-	4	-	-	**AP-RJCAT6-CP4-G**	**90**
		Punchdown	-	4	-	-	**AP-RJCAT6-PD4-G**	**91**

Ordering Information (cont'd)

Fiber Pigtail Chart

Use the Pigtail Code to specify the desired 900µm Spiral Wrap Splice-on Fiber Pigtail to be included.

900µm Spiral Wrap Splice-on Pigtail				Part Number	Pigtail Code
Adapter	Mode	Fibers	Fiber Type		
N/A	N/A	N/A	N/A	NONE	00
ST	SM	6	OS1/OS2	RLH-06SMST-03M	01
		12	OS1/OS2	RLH-12SMST-03M	02
	MM	6	OM1	RLH-06MMST-03M	06
			OM2	RLH-06M5ST-03M	07
			OM3	RLH-06MXST-03M	08
			OM4	RLH-06MCST-03M	09
		12	OM1	RLH-12MMST-03M	12
			OM2	RLH-12M5ST-03M	13
			OM3	RLH-12MXST-03M	14
			OM4	RLH-12MCST-03M	15
FC	SM	6	OS1/OS2	RLH-06SMFC-03M	20
		12	OS1/OS2	RLH-12SMFC-03M	21
	MM	6	OM1	RLH-06MMFC-03M	23
			OM2	RLH-06M5FC-03M	24
			OM3	RLH-06MXFC-03M	25
			OM4	RLH-06MCFC-03M	26
		12	OM1	RLH-12MMFC-03M	28
			OM2	RLH-12M5FC-03M	29
			OM3	RLH-12MXFC-03M	30
			OM4	RLH-12MCFC-03M	31
FC/APC	SM	6	OS1/OS2	RLH-06SMFA-03M	33
		12	OS1/OS2	RLH-12SMFA-03M	34
SC	SM	6	OS1/OS2	RLH-06SMSC-03M	40
		12	OS1/OS2	RLH-12SMSC-03M	41
	MM	6	OM1	RLH-06MMSC-03M	43
			OM2	RLH-06M5SC-03M	44
			OM3	RLH-06MXSC-03M	45
			OM4	RLH-06MCSC-03M	46
		12	OM1	RLH-12MMSC-03M	48
			OM2	RLH-12M5SC-03M	49
			OM3	RLH-12MXSC-03M	50
			OM4	RLH-12MCSC-03M	51
SC/APC	SM	6	OS1/OS2	RLH-06SMSA-03M	53
		12	OS1/OS2	RLH-12SMSA-03M	54
LC	SM	6	OS1/OS2	RLH-06SMLC-03M	60
		12	OS1/OS2	RLH-12SMLC-03M	61
		24	OS1/OS2	RLH-12SMLC-03M (2)	62
	MM	6	OM1	RLH-06MMLC-03M	63
			OM2	RLH-06M5LC-03M	64
			OM3	RLH-06MXLC-03M	65
			OM4	RLH-06MCLC-03M	66
		12	OM1	RLH-12MMLC-03M	68
			OM2	RLH-12M5LC-03M	69
			OM3	RLH-12MXLC-03M	70
			OM4	RLH-12MCLC-03M	71
		24	OM1	RLH-12MMLC-03M (2)	73
			OM2	RLH-12M5LC-03M (2)	74
			OM3	RLH-12MXLC-03M (2)	75
			OM4	RLH-12MCLC-03M (2)	76
LC/APC	SM	6	OS1/OS2	RLH-06SMLA-03M	78
		12	OS1/OS2	RLH-12SMLA-03M	79
		24	OS1/OS2	RLH-12SMLA-03M (2)	80

Key Specifications

Adapter Plates:	Holds 1 LGX® plate Up to 12 Fibers each plate *Ordered Separately
Adapter Plates:	ST Simplex SC Simplex, Duplex SC/APC Simplex, Duplex LC Simplex, Duplex, Quad MTRJ Simplex FC Simplex
Mounting Style:	Wall and DIN rail (DIN rail kit ordered separately or may be ordered preinstalled)
Environmental:	Suitable for use indoors or within a weatherproof enclosure
Construction:	Powder coated steel, hinged door and plunger latches
Accessory Kit:	Qty. 1 - 12 Position Adhesive Splice Holder Qty. 15 – Splice Sleeves Qty. 2 – Hook and Loop Velcro® wire management strap with adhesive base Qty. 3 – Cable ties Qty. 1 – Distribution chart label Qty. 3 – #10 x 3/4” Mounting screws and washers
Dimensions:	4.0” (W) x 1.6” (D) x 5.3” (H), (102mm x 41mm x 135mm)

Contact

By Mail:	Att: Sales RLH Industries, Inc. 936 N. Main St. Orange, CA 92867	
By Phone: Sales / Service Mon - Fri, 6am - 6pm, PST	Local	714-532-1672
	Toll Free	800-877-1672 866-DO-FIBER
By Email:	info@fiberopticlink.com	
By FAX:	714-532-1885	

Tech Support

By Email:	support@fiberopticlink.com	
By Phone:	Toll Free	855-754-2497 855-RLH-24X7