RLH Industries, Inc.
Fiber Optic Link

The leader in rugged, fiber optic technology

USER GUIDE

www.fiberopticlink.com

UG-M061 2023-08-07

Scorpion 4 Plate Fiber Patch Panel

Wall Mount, Small Footprint, Splicing and Patching up to 96 Fibers

The RLH Scorpion 4 Plate Fiber Patch Panel is designed for fiber optic patching and splicing applications where wall or back board space is at a premium. It is designed to fit into small enclosures, the small footprint and door design allow the patch panel to be opened & closed without taking up additional backboard room for clearance.

The fiber patch panel has a large wrap around door for easy access, which is secured with flip latches. A built-in padlock hasp provides additional security if desired. It comes standard with fiber management spools, distribution chart, cable mounting tiedowns, and Velcro® straps for securing fiber cable. Self-sealing removable 1-1/4” grommets on the top and bottom of the enclosure, together with fiber strength member clamps, allow for safe entrance and exit of fiber optic cable. Wall mounting hardware is also included.

Adapter plates may be ordered separately or preinstalled and are available with ST, SC, FC, LC, MTRJ, UPC and APC style adapters. When ordered using our configuration matrix, the Adapter Plates are preinstalled, and the Splice on Fiber Pigtails are bundled with the patch panel for convenience.

Scorpion 4 Plate Fiber Patch Panel

Accessory Kit

Key Features

- Holds 4 LGX® adapter plates, blank adapter plates included
- Small Footprint, Fully encloses distribution fiber
- Self-sealing removable grommets (up to 1-1/4”) on the top and bottom
- Hinged door with flip latches
- Includes 2 strength member clamps for securing entry cable
- Adapter plates may be removed with fibers attached
- Includes Velcro for easy and flexible fiber management
- Durable powder coated steel construction
- Multiple built in anchor points to secure fiber cable inside
- Splice trays and sleeves ordered seperately
- Holds ST, SC, FC, LC, MTRJ, UPC, APC style adapters
- Wall mounting hardware , cable ties, & distribution chart included
- Made in USA

Dimensions & Components

The dimensional diagram below calls out important features of the Wall Mount Patch Panel.

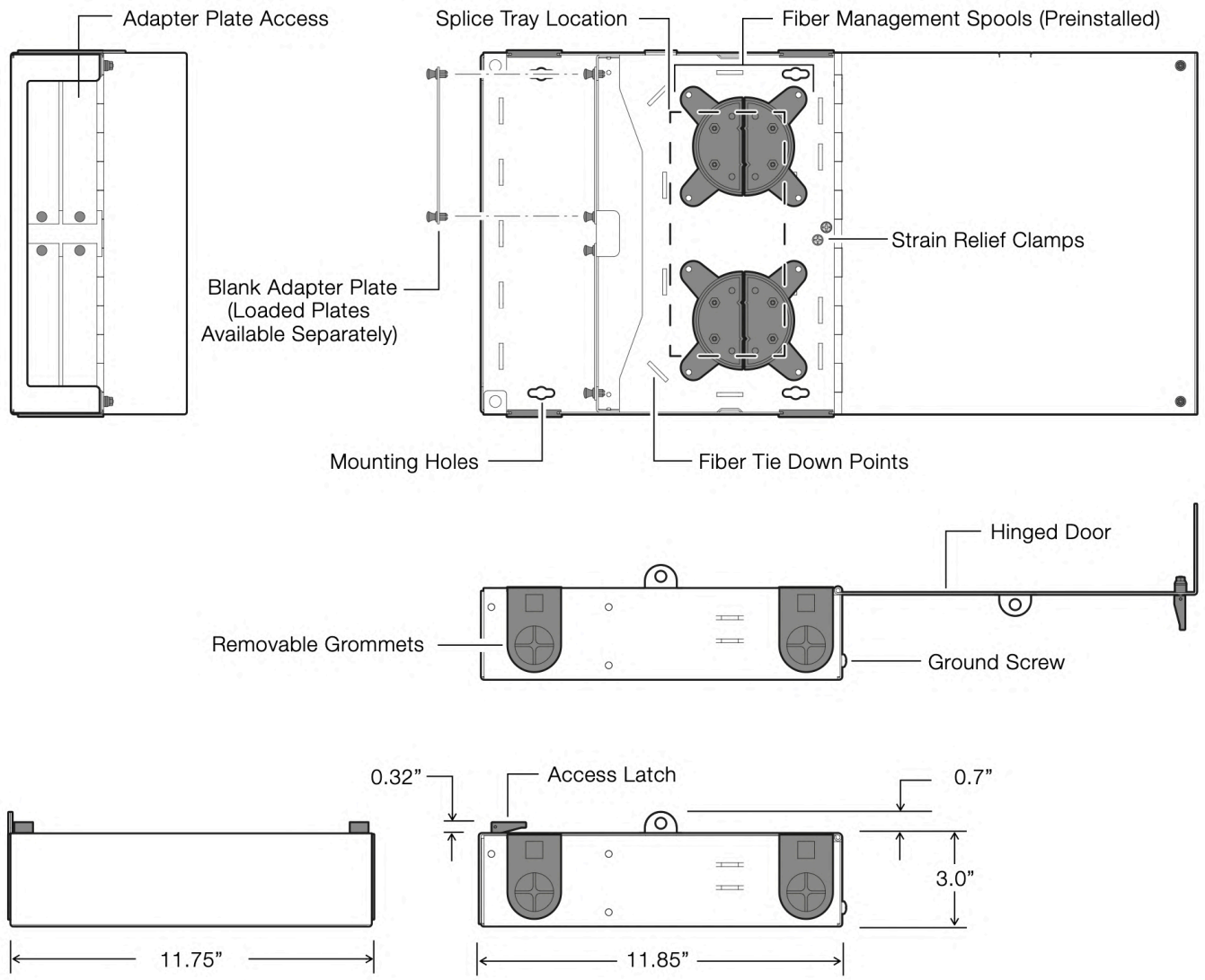

Installation

Choose a suitable location, with room for the door to open fully for easy access to the interior. Pre-position the patch panel to plan out cable routings and check for any potential problems with the location. The patch panel may be mounted in any orientation making it a flexible solution in the field.

Before Installing

Fiber management spools are preinstalled for accommodating fiber cable when used as a patching solution, optional splice trays are sold separately for splicing configurations. To use the optional splice trays, remove the fiber management spools by loosening the attaching hardware before mounting. Once the spools are removed, the patch panel may be wall mounted. Then to secure the splice trays in position use the (2) Velcro straps included in the accessory kit.

Wall Mounting

Once the position is determined, mark out the mounting points and use the included 3/4” screws to mount the patch panel. For all other mounting applications, use appropriate mounting hardware as required.

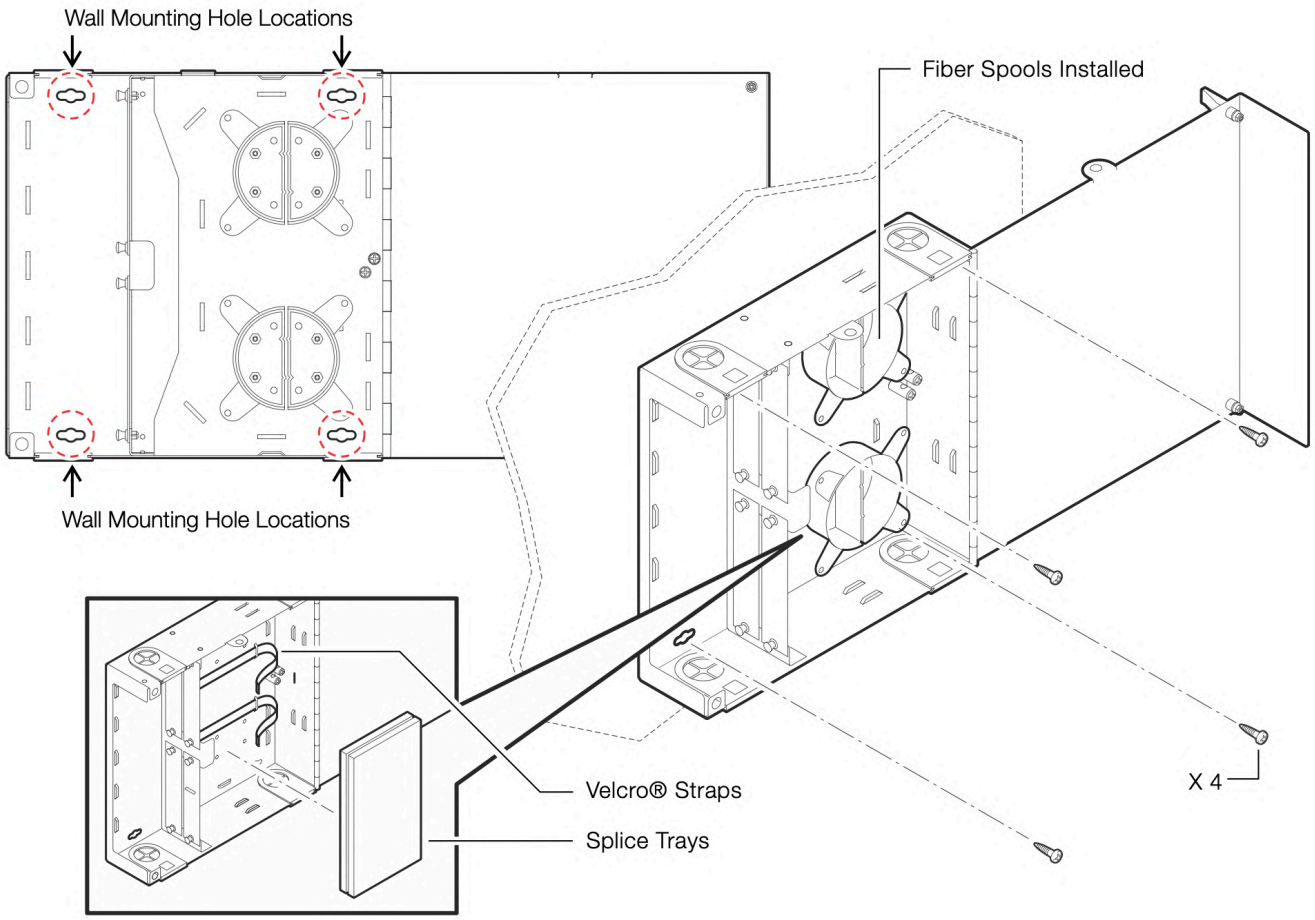

Ordering Information

Use the following part number when ordering the patch panel without fiber adapter plates or pigtails.

Description	Capacity	Dimensions	Part Number
4 Plate Wall Mount Patch Panel	4 Fiber Adapter Plates	11.8” (W) x 3.7” (D) x 11.75” (H)	SCORP4-1

- Fiber adapter plates and/or pigtails can be ordered separately; plates can be preinstalled, while pigtails will be bundled

Ordering with Fiber Adapter Plates, Pigtails, and Splice Trays

Use the ordering code below to order the patch panel with any combination of a preinstalled adapter plates, bundled fiber pigtails, and preinstalled splice trays. Refer to the Fiber Adapter Plate Chart and the Fiber Pigtail Chart on the following pages.

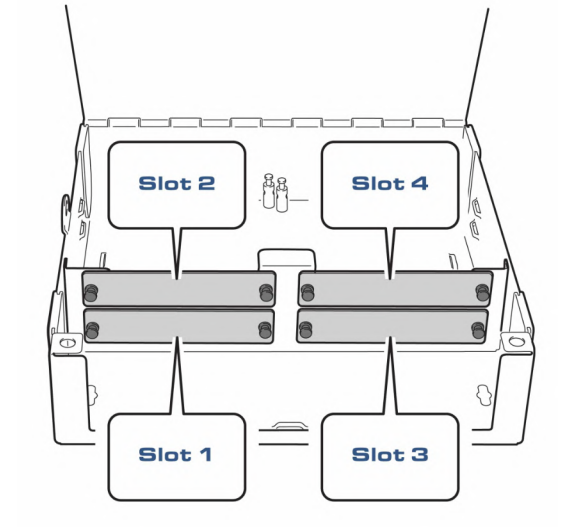

Example #1: **S4 - 32 - 32 - 32 - 32 - 41 - 41 - 41 - 41 - 4 - 1**

Slot 1 (32):	AP-SC6-LDSM-G
Slot 2 (32):	AP-SC6-LDSM-G
Slot 3 (32):	AP-SC6-LDSM-G
Slot 4 (32):	AP-SC6-LDSM-G
Slot 1 (41):	RLH-12SMSC-03M
Slot 2 (41):	RLH-12SMSC-03M
Slot 3 (41):	RLH-12SMSC-03M
Slot 4 (41):	RLH-12SMSC-03M
Splice Trays (4):	RLH-FST-04

S4 - [XX] - [XX] - [XX] - [XX] - [XX] - [XX] - [XX] - [XX] - [X] - 1

Slot 1 Slot 2 Slot 3 Slot 4 | Slot 1 Slot 2 Slot 3 Slot 4

Fiber Adapter Plates
Use the code from the Adapter Plate Chart* to populate slots with adapter plates preinstalled

Fiber Pigtails
Use the code from the Fiber Pigtail Chart* to have them bundled together with the patch panel

Splice Trays
Enter the quantity of 12-fiber splice trays required (0 to 4) – *PN: RLH-FST-04*

*Please refer to the **Fiber Adapter Plate Chart** and the **Fiber Pigtail Chart** on the following pages.

Ordering Information (cont'd)

Adapter Plate Chart

Use the Adapter Code to specify the desired plate style to be preinstalled.

Adapter Plate Style						Supported Fiber Types	Grey Plate Part Number	Adapter Code
Adapter	Mode	Type	Fibers	Positions	Color			
Blank	**–**	–	–	–	–	–	**AP-BLANK-G**	**00**
ST	**SM**	Simplex	6	6	Yellow Caps	OS1/OS2	**AP-ST6-LSSM-G**	**01**
			12	12	Yellow Caps	OS1/OS2	**AP-ST12-LSSM-G**	**03**
	MM	Simplex	6	6	Black Caps	OM1~OM4	**AP-ST6-LSMM-G**	**06**
			12	12	Black Caps	OM1~OM4	**AP-ST12-LSMM-G**	**08**
FC	**SM**	Simplex	6	6	Yellow Caps	OS1/OS2	**AP-FC6-LSSM-G**	**20**
	MM	Simplex	6	6	Black Caps	OM1/OM2	**AP-FC6-LSMM-G**	**23**
FC/APC	**SM**	Simplex	6	6	Green Caps	OS1/OS2	**AP-FA6-LSSM-G**	**26**
SC	**SM**	Simplex	6	6	■ blue	OS1/OS2	**AP-SC6-LSSM-G**	**30**
		Duplex	12	6	■ blue	OS1/OS2	**AP-SC6-LDSM-G**	**32**
	MM	Simplex	6	6	■ beige	OM1/OM2	**AP-SC6-LSMM-G**	**33**
		Duplex	12	6	■ beige	OM1/OM2	**AP-SC6-LDMM-G**	**35**
SC/APC	**SM**	Simplex	6	6	■ green	OS1/OS2	**AP-SA6-LSSM-G**	**36**
		Duplex	12	6	■ green	OS1/OS2	**AP-SA6-LDSM-G**	**38**
SC 10G	**MM**	Simplex	6	6	■ aqua	OM3/OM4	**AP-SC6-LSMX-G**	**39**
		Duplex	12	12	■ aqua	OM3/OM4	**AP-SC6-LDMX-G**	**41**
LC	**SM**	Duplex	6	3	■ blue	OS1/OS2	**AP-LC3-LDSM-G**	**51**
			12	6	■ blue	OS1/OS2	**AP-LC6-LDSM-G**	**52**
		Quad	24	6	■ blue	OS1/OS2	**AP-LC6-LQSM-G**	**54**
	MM	Duplex	6	3	■ beige	OM1/OM2	**AP-LC3-LDMM-G**	**56**
			12	6	■ beige	OM1/OM2	**AP-LC6-LDMM-G**	**57**
		Quad	24	6	■ beige	OM1/OM2	**AP-LC6-LQMM-G**	**59**
LC/APC	**SM**	Duplex	6	3	■ green	OS1/OS2	**AP-LA3-LDSM-G**	**61**
			12	6	■ green	OS1/OS2	**AP-LA6-LDSM-G**	**62**
		Quad	24	6	■ green	OS1/OS2	**AP-LA6-LQSM-G**	**64**
LC 10 GIG	**MM**	Duplex	6	3	■ aqua	OM3/OM4	**AP-LC3-LDMX-G**	**66**
			12	6	■ aqua	OM3/OM4	**AP-LC6-LDMX-G**	**67**
		Quad	24	6	■ aqua	OM3/OM4	**AP-LC6-LQMX-G**	**69**
CAT6 RJ-45	**–**	Coupler	-	4	-	-	**AP-RJCAT6-CP4-G**	**90**
		Punchdown	-	4	-	-	**AP-RJCAT6-PD4-G**	**91**

Ordering Information (cont'd)

Fiber Pigtail Chart

Use the Pigtail Code to specify the desired 900µm Spiral Wrap Splice-on Fiber Pigtail to be included.

900µm Spiral Wrap Splice-on Pigtail				Part Number	Pigtail Code
Adapter	Mode	Fibers	Fiber Type		
N/A	N/A	N/A	N/A	NONE	00
ST	SM	6	OS1/OS2	RLH-06SMST-03M	01
		12	OS1/OS2	RLH-12SMST-03M	02
	MM	6	OM1	RLH-06MMST-03M	06
			OM2	RLH-06M5ST-03M	07
			OM3	RLH-06MXST-03M	08
			OM4	RLH-06MCST-03M	09
		12	OM1	RLH-12MMST-03M	12
			OM2	RLH-12M5ST-03M	13
			OM3	RLH-12MXST-03M	14
			OM4	RLH-12MCST-03M	15
FC	SM	6	OS1/OS2	RLH-06SMFC-03M	20
		12	OS1/OS2	RLH-12SMFC-03M	21
	MM	6	OM1	RLH-06MMFC-03M	23
			OM2	RLH-06M5FC-03M	24
			OM3	RLH-06MXFC-03M	25
			OM4	RLH-06MCFC-03M	26
		12	OM1	RLH-12MMFC-03M	28
			OM2	RLH-12M5FC-03M	29
			OM3	RLH-12MXFC-03M	30
			OM4	RLH-12MCFC-03M	31
FC/APC	SM	6	OS1/OS2	RLH-06SMFA-03M	33
		12	OS1/OS2	RLH-12SMFA-03M	34
SC	SM	6	OS1/OS2	RLH-06SMSC-03M	40
		12	OS1/OS2	RLH-12SMSC-03M	41
	MM	6	OM1	RLH-06MMSC-03M	43
			OM2	RLH-06M5SC-03M	44
			OM3	RLH-06MXSC-03M	45
			OM4	RLH-06MCSC-03M	46
		12	OM1	RLH-12MMSC-03M	48
			OM2	RLH-12M5SC-03M	49
			OM3	RLH-12MXSC-03M	50
			OM4	RLH-12MCSC-03M	51
SC/APC	SM	6	OS1/OS2	RLH-06SMSA-03M	53
		12	OS1/OS2	RLH-12SMSA-03M	54
LC	SM	6	OS1/OS2	RLH-06SMLC-03M	60
		12	OS1/OS2	RLH-12SMLC-03M	61
		24	OS1/OS2	RLH-12SMLC-03M (2)	62
	MM	6	OM1	RLH-06MMLC-03M	63
			OM2	RLH-06M5LC-03M	64
			OM3	RLH-06MXLC-03M	65
			OM4	RLH-06MCLC-03M	66
		12	OM1	RLH-12MMLC-03M	68
			OM2	RLH-12M5LC-03M	69
			OM3	RLH-12MXLC-03M	70
			OM4	RLH-12MCLC-03M	71
		24	OM1	RLH-12MMLC-03M (2)	73
			OM2	RLH-12M5LC-03M (2)	74
			OM3	RLH-12MXLC-03M (2)	75
			OM4	RLH-12MCLC-03M (2)	76
LC/APC	SM	6	OS1/OS2	RLH-06SMLA-03M	78
		12	OS1/OS2	RLH-12SMLA-03M	79
		24	OS1/OS2	RLH-12SMLA-03M (2)	80

Key Specifications

Adapter Plates:	Holds 4 LGX® plates Up to 24 Fibers each plate *Ordered Separately
Mounting Style:	Wall or panel mount
Environmental:	Indoor or inside weatherproof enclosure
Construction:	Powder coated steel, hinged door with padlock hasp and flip latches
Accessory Kit:	Qty. 1 – 30” x 1/2” Velcro® straps for securing fiber Qty. 2 – 12” x 1/2” Velcro® straps for securing Splice Trays Qty. 10 – Cable ties Qty. 2 – Distribution chart labels Qty. 4 – #10 x 3/4” Mounting screws and washers
Dimensions:	11.8” (W) x 3.7” (D) x 11.75” (H), (300mm x 94mm x 299mm)

Contact

By Mail:	Att: Sales RLH Industries, Inc. 936 N. Main St. Orange, CA 92867	
By Phone: Sales / Service Mon - Fri, 6am - 6pm, PST	Local	714-532-1672
	Toll Free	800-877-1672 866-DO-FIBER
By Email:	info@fiberopticlink.com	
By FAX:	714-532-1885	

Tech Support

By Email:	support@fiberopticlink.com	
By Phone:	Toll Free	855-754-2497 855-RLH-24X7